R04

Basic gear box technical data	
Gear ratio	5
Nominal motor power(S1)	300 [kW] 1260 [rpm]
Nominal motor torque(S1)	2260 [Nm]
Max. motor driving torque	2750 [Nm]
Max. motor braking torque	2750 [Nm]
Motor short cirquit torque	12000 (Nm)
Sliping torque of input coupling	5500-8250 [Nm]
Max. speed of input shaft	4829 [rpm]
Max weight electric motor	750 kg (TBC)
Max weight gearbox	<390 kg (TBC)
Max weight coupling	<25 kg (TBC)
Wheel diameter (new/worn)	840 / 770 mm
Track gauge (nominal)	1435 mm
Service speed	140 km/h
Max. static axle load	19[t]

R04 Rated modes in calculation:

	Mode	Torque Mk (Nm)	Speed n (rpm)	Relative time to all operational time T(%)
1	Acceleration	2750	1250	14
2	Drive	1550	2252	32,5
3	Speed 90 km/h	1100	3118	29,5
4	Speed 90 - 120 km/h	800	4158	4
5	Speed 120 - 140 km/h	680	4829	0,5
6	Braking 140 - 90 km/h	675	4829	1,5
7	Braking 90 - 36 km/h	1100	3118	9
8	Braking 36 - 0 km/h	2750	1275	9

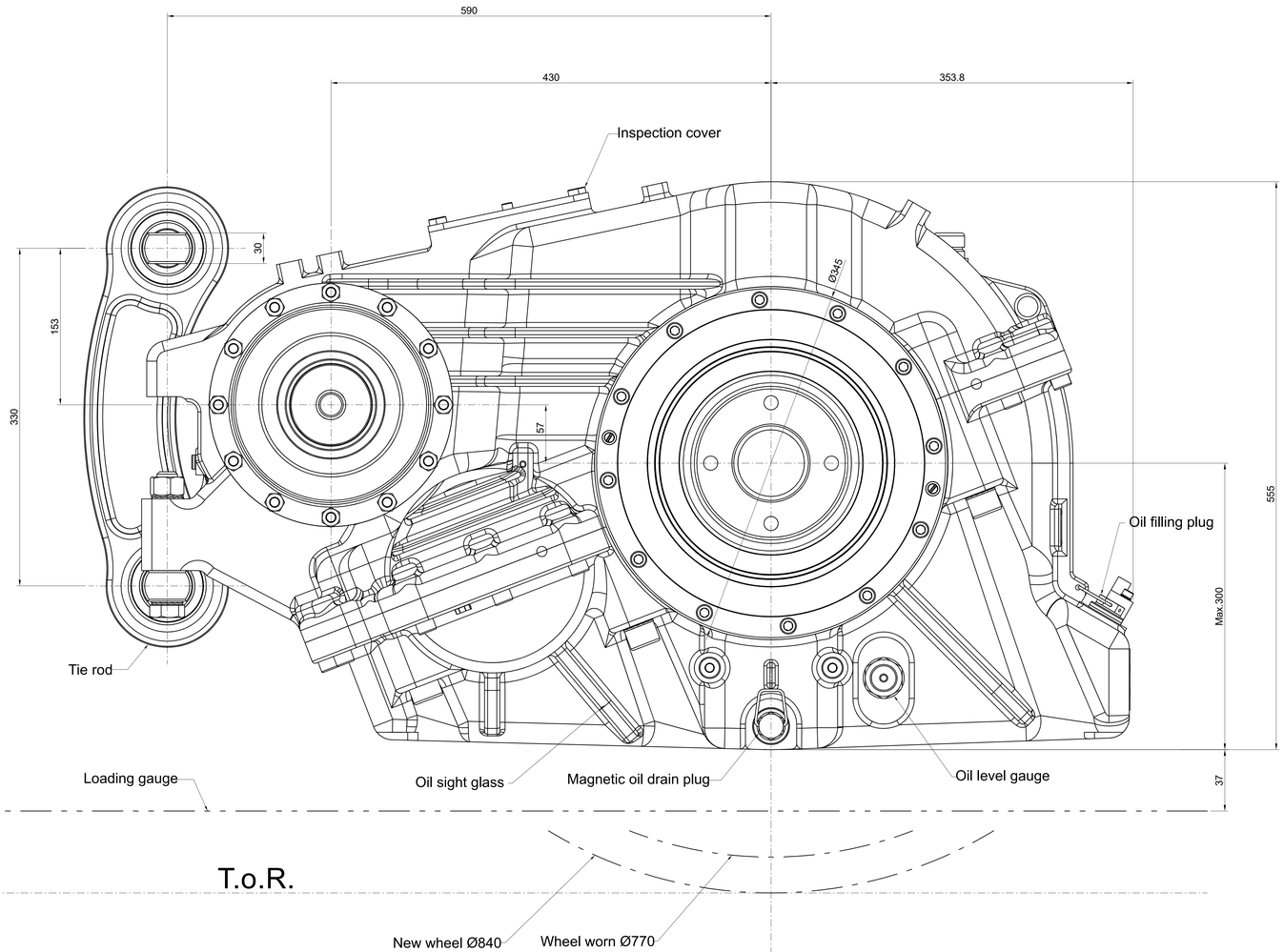

MOTOR SHAFT DETAIL
Scale 1:1

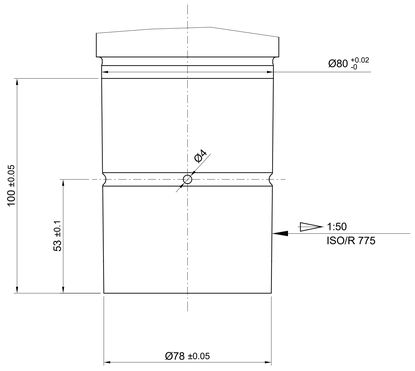

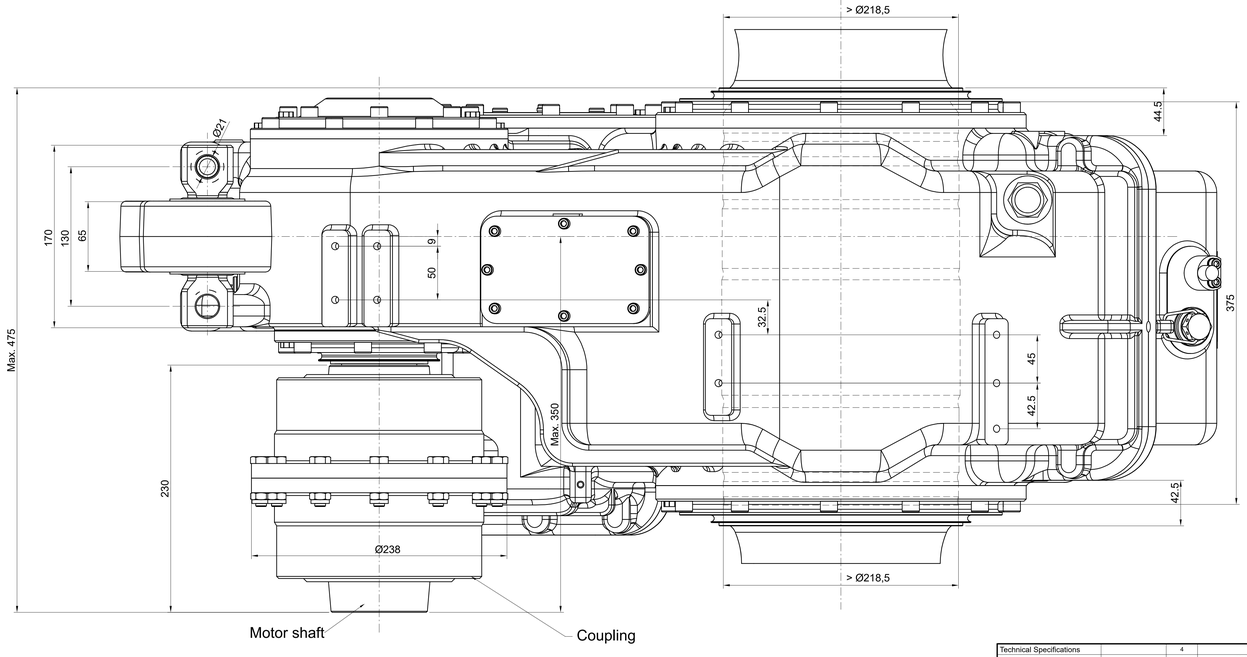

PRELIMINARY

Tara Position Detail

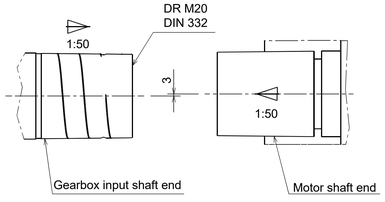

ISO 2768 General Tolerances		
<1000	6,0	0,8
<630	4,0	0,7
<400	3,0	0,6
<250	3,0	0,4
100	2,0	0,3
40	1,5	0,2
L mm	Hem	Isi.
Nom. Size		Class
<4000	2,0	0,4
<2000	1,2	0,4
<1000	0,8	0,3
<400	0,5	0,3
30-120	0,3	0,2
2-30	0,2	0,1
L mm	m ±	K ±
Nom. Size		Class
>20000	9,0	8,0
<20000	8,0	7,0
<16000	7,0	6,0
<12000	6,0	5,0
<8000	5,0	4,0
<4000	4,0	3,0
<2000	3,0	2,0
<1000	2,0	1,5
<400	1,0	1,0
30-120	1,0	0,5
2-30	1,0	0,5
L mm	A ±	E ±
Nom. Size		Class

ISO 13920 Welded Construction		
<1000	6,0	0,8
<630	4,0	0,7
<400	3,0	0,6
<250	3,0	0,4
100	2,0	0,3
40	1,5	0,2
L mm	Hem	Isi.
Nom. Size		Class
<4000	2,0	0,4
<2000	1,2	0,4
<1000	0,8	0,3
<400	0,5	0,3
30-120	0,3	0,2
2-30	0,2	0,1
L mm	m ±	K ±
Nom. Size		Class
>20000	9,0	8,0
<20000	8,0	7,0
<16000	7,0	6,0
<12000	6,0	5,0
<8000	5,0	4,0
<4000	4,0	3,0
<2000	3,0	2,0
<1000	2,0	1,5
<400	1,0	1,0
30-120	1,0	0,5
2-30	1,0	0,5
L mm	A ±	E ±
Nom. Size		Class

Modif. No	Modification Description	Date	Sign
4	Drawing Updated	08/04/2026	T.ŞABA
3	Updated motor shaft and axle dimensions	23/11/2021	D. Pisano
2	Changed the interface dimensions	01/10/2021	D. Pisano
1	Changed drive unit configuration	04/08/2021	Marco EID

Item No	Designation Name of Item		Qty.	Standard Code Identification No		Material	Dimension	Weight (Kg)
	ISO 1302	ISO 8015	ISO 2553	General Tol.		ISO 2768 f☐ m☐ c☐ v☐		
	EN 15085-2 Certification Level		CL1☐ CL2☐ CL3☐ CL4☐	Weld Pro.		ISO 13920 A☐ B☐ E☐ F☐		
				Cast Steel		ISO 12708 Lm2☐ Lr2☐ Sm2☐ Sr2☐		

Approved	M. GORLANI	Scale 1:1
Checked	M. BORLO	
Prepared	MARCO EID	

TURASAS
Turkish Railway Vehicles Industry Inc.

TYP

Gearbox with coupling

GZ90.04.10.00005

Date: 28/05/2021 | Parts List No: | Sheet: 1/1 | Size:A0 | Rev:04

Reproduction, distribution or use of this document or its content is not permitted without prior written consent of TURASAS. Offenders will be liable for the payment of damages. All rights reserved in the event of the grant of a patent, utility model or registration of a commercial design.